CHRYSLER, FIAT, FORD, LANCIA

20462

KIT	OBD		mm.	Kg.	Euro 5	Euro 6
PK1035			600	5.45	(1)	

Original-Artikelnummer:

1846105, 1846107, 2095049, 2572703, 51864511, 51877649, 51934168, 51938204, 52033856, 52048686, 52093144

MARKE	MODELL		DATUM
CHRYSLER	YPSILON 1.2i 8V 1242 cc 51 Kw / 69 cv 169A4000	(1)	9/11>
FIAT	500 1.2i 8V 1242 cc 51 Kw / 69 cv 169A4000	(1)	2/10>
FIAT	500 1.2i 8V 1242 cc 51 Kw / 69 cv 169A4000		7/12>
FIAT	500 1.2i 8V LPG 1242 cc 51 Kw / 69 cv 169A4000	(1)	1/09>
FIAT	PANDA 1.2i 8V 1242 cc 51 Kw / 69 cv 169A4000	(1)	9/10>2/12
FIAT	**PANDA 1.2i 8V LPG 1242 cc 51 Kw / 69 cv 169A4000**	(1)	9/10>2/12
FORD	KA 1.2i 8V 1242 cc 51 Kw / 69 cv 169A4000		9/13>6/16
FORD	KA 1.2i 8V 1242 cc 51 Kw / 69 cv 169A4000	(1)	10/10>9/13
LANCIA	YPSILON 1.2i 8V LPG 1242 cc 49 Kw / 67 cv 169A4000	(1)	5/11>
LANCIA	YPSILON 1.2i 8V 1242 cc 51 Kw / 69 cv 169A4000	(1)	5/11>
LANCIA	YPSILON 1.2i 8V 1242 cc 51 Kw / 69 cv 169A4000		5/13>
LANCIA	YPSILON 1.2i 8V LPG 1242 cc 51 Kw / 69 cv 169A4000	(1)	5/11>

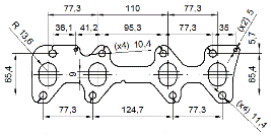

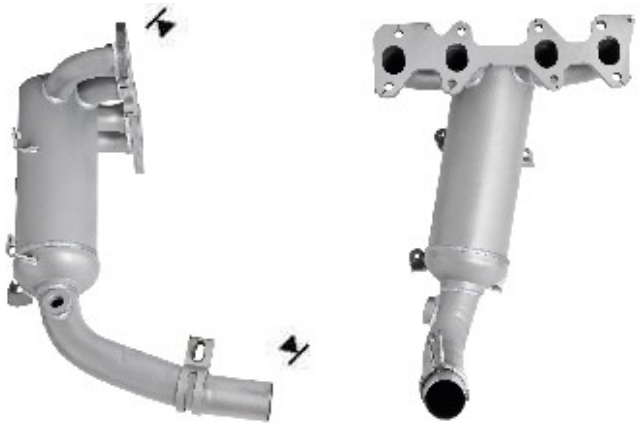

Ø 47,8 ext