DAIHATSU, TOYOTA

95154

PK961 | OBD | 2500 | 9.90 | Euro 5

Original-Artikelnummer:

174100Y010

MARKE	MODELL	DATUM
DAIHATSU	**CHARADE 1.3i VVTI 16V 1329 cc 73 Kw / 99 cv 1NRFE**	6/11>
TOYOTA	YARIS 1.3i VVTI 16V 1329 cc 74 Kw / 101 cv 1NRFE	11/08>7/11

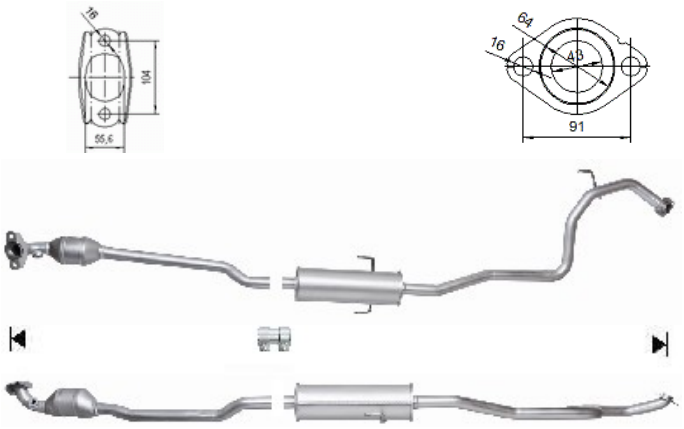

Ø 42,5 ext