CITROËN, FIAT, PEUGEOT

15795

PK1278 | OBD | 470 | 3.10 | Euro 5 (1)

Original-Artikelnummer:

1400756180, 1401458980, 1731RQ, 173878

MARKE	MODELL		DATUM
CITROËN	**NEMO 1.4i 8V 1360 cc 55 Kw / 75 cv TU3A (KFV)**		12/07>9/10
CITROËN	NEMO 1.4i 8V 1360 cc 55 Kw / 75 cv TU3A, TU3AE5 (KFT)	(1)	9/10>12/14
FIAT	FIORINO 1.4i 8V 1360 cc 55 Kw / 75 cv TU3A (KFV)		12/07>12/10
FIAT	FIORINO 1.4i 8V 1360 cc 55 Kw / 75 cv TU3A (KFT)	(1)	1/11>12/15
FIAT	QUBO 1.4i 8V 1360 cc 55 Kw / 75 cv TU3A (KFV)		5/08>12/10
FIAT	QUBO 1.4i 8V 1360 cc 55 Kw / 75 cv TU3A (KFT)	(1)	1/11>12/15
PEUGEOT	BIPPER 1.4i 8V 1360 cc 55 Kw / 75 cv TU3A (KFV)		12/07>9/10
PEUGEOT	BIPPER 1.4i 8V 1360 cc 55 Kw / 75 cv TU3A, TU3AE5 (KFT)	(1)	9/10>12/14
PEUGEOT	BIPPER TEPEE 1.4i 8V 1360 cc 55 Kw / 75 cv TU3A (KFV)		3/08>9/10
PEUGEOT	BIPPER TEPEE 1.4i 8V 1360 cc 55 Kw / 75 cv TU3A, TU3AE5 (KFT)	(1)	9/10>12/14

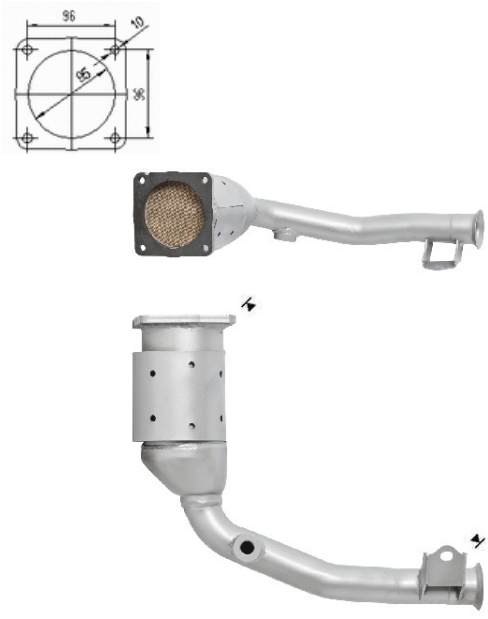

Ø 61x90°